Highlights

UAV-Acquired Ship Hull Image Stitching for Inspection: A New Benchmark and Multi-task Edge-Aware Stitching Network

Hongru Xu,Zhe Hou,Chenjia Wang,Xinghui Dong

- Making the first effort to collect a large-scale dedicated ship hull image stitching dataset for training and benchmarking stitching algorithms, and achieving accurate and visually consistent results on challenging real-world hull images.
- Introducing the first multi-task edge-aware ship hull image stitching network, to address insufficient feature utilization by extracting multi-scale edge features and improve registration performance.
- Integrating multi-scale attention to capture both global context and local details for precise registration.

UAV-Acquired Ship Hull Image Stitching for Inspection: A New Benchmark and Multi-task Edge-Aware Stitching Network⋆

Hongru Xu[a], Zhe Hou[a], Chenjia Wang[b] and Xinghui Dong[a,*]

[a]State Key Laboratory of Physical Oceanography and the Faculty of Information Science and Engineering, Ocean University of China, No.238 Songling Road, Qingdao, 266100, Shangdong, China

[b]School of Mathematical and Computer Sciences, Heriot-Watt University, Riccarton Mains Road, EH14 4AS, Edinburgh, United Kingdom

ARTICLE INFO

Keywords:
Image Stitching
Image Registration
Edge-Aware
Multi-task
UAV-Acquired
Ship Hull Images

ABSTRACT

Recent applications of Unmanned Aerial Vehicles (UAVs) and machine learning technologies have enabled intelligent inspection of ship surface conditions with high-resolution hull images. Image stitching is a critical step in existing automated hull inspection pipelines. However, hull images are often acquired under challenging conditions, characterized by low texture, limited overlap and large parallax factors that severely compromise stitching accuracy and structural consistency. This issue introduces inevitable challenges to existing hull image stitching methods, leading to reduced performance. Establishing high-quality datasets with realistic hull-surface images and reliable baseline image stitching algorithms is critical for addressing these challenges. This work presents a new benchmark dataset, namely, ShipHull66, consisting of hull images captured under diverse and realistic marine conditions, which enables off-the-shelf training and fine-tuning of image stitching models. Furthermore, we propose a novel Multi-task Edge-Aware Image Stitching Network, i.e., MTEA-StitchNet, which incorporates edge-aware priors and multi-scale pyramid feature matching for effective alignment of geometric structures and coherence of visual information. Compared to state-of-the-art image stitching models on the ShipHull66 dataset, our MTEA-StitchNet has achieved better stitching accuracy, image quality and robustness to complicated environments, as demonstrated by the Peak Signal-to-Noise Ratio (PSNR) and Structural Similarity Index (SSIM) metrics.

1. Introduction

Regular inspection of ocean-going vessels is essential to mitigate structural degradation caused by harsh marine environments (Nair, Sivaprasad and Nandakumar, 2017). Traditionally, hull inspections have been performed manually by human inspectors within dockyard facilities (Bonnin-Pascual and Ortiz, 2019). This operation requires inspectors to examine every part of the hull within arm's reach. As a result, manual inspection is costly, hazardous and time-consuming (Lin and Dong, 2023). Compared with close-proximity manual hull inspection methods, remote inspection technologies have the potential to improve performance while reducing operational costs (Lin and Dong, 2024).

Although Unmanned Aerial Vehicles (UAVs) offer a safer and more efficient alternative to traditional manual inspection (Fontenla-Carrera, Pensado, Veiga-López and González-Jorge, 2025), their limited field of view requires effective image stitching techniques to generate comprehensive high-resolution panoramas of the hull surface. However, stitching ship hull imagery presents unique challenges compared to general scenes, as surfaces are often characterised by low-texture regions, limited overlap, and large parallax.

Traditional feature-based methods (Zhu and Ren, 2014) often do not extract sufficient keypoints in such distinctive environments. Although recent deep learning-based approaches, such as UDIS (Nie, Lin, Liao, Liu and Zhao, 2021b) and UDIS2 (Nie, Lin, Liao, Liu and Zhao, 2023), have achieved significant progress in natural image stitching, they typically rely on rich textural features for alignment. When applied to monotonous hull surfaces, these methods struggle to maintain structural consistency, often resulting in ghosting artefacts or geometric distortions.

The primary cause of these performance failures is that current state-of-the-art models are trained on general-purpose, non-dedicated datasets, which suffer from a substantial domain gap. Unlike general-purpose or marine datasets, UAV-acquired hull images capture high-quality local details within a limited field of view (Ballesteros, Ortega, Hernández and Moreno, 2014), making accurate image stitching a critical component in assessing the general condition of the hull. Due to the unique visual characteristics of ship hulls, recent supervised or unsupervised models trained in other domains suffer performance degradation when applied to this specific task.

To address these limitations, we first collect a new ship hull image dataset for stitching, namely, ShipHull66, which represents a pioneering effort as the first dedicated dataset comprised of UAV-acquired ship hull imagery. Building

⋆This study was supported in part by Shandong Provincial Natural Science Foundation (No. ZR2025ZD36), in part by the National Natural Science Foundation of China (NSFC) (No. 42576200) and in part by the Key Research and Development Program of Shandong Province, China (No. 2024ZLGX06).

⋆⋆The dataset, source code and model will be made publicly available on the acceptance of the paper.

*Corresponding author

xuhongru@stu.ouc.edu.cn (H. Xu); houzhe@stu.ouc.edu.cn (Z. Hou); Chenjia.Wang@hw.ac.uk (C. Wang); xinghui.dong@ouc.edu.cn (X. Dong)

ORCID(s): 0000-0003-1047-427X (X. Dong)

upon this foundational resource, we then propose a Multi-task Edge-Aware Image Stitching Network designed specifically for hull images, referred to as MTEA-StitchNet, which incorporates edge structural priors to emphasise geometric consistency. By training this specialised architecture on the ShipHull66 dataset, this work establishes a new domain baseline for objective comparison and evaluation in the field of automated hull inspection.

In summary, the contributions of this work are threefold.

- We capture and construct ShipHull66, the first large-scale domain-specific dataset tailored for training and evaluating hull image stitching algorithms.
- We propose a novel Multi-task Edge-Aware Image Stitching Network, namely, MTEA-StitchNet, which improves alignment accuracy and structural consistency in low-texture and high-parallax scenarios.
- We design a multi-scale attention mechanism for the registration stage in MTEA-StitchNet to effectively capture both global context and local details, ensuring precise registration and visual coherence.

The remainder of this paper is organised as follows. Section 2 reviews the related work on hull inspection and image stitching. Section 3 details the collection and construction process of the ShipHull66 dataset. Section 4 presents the architecture and methodology of the proposed MTEA-StitchNet. Sections 5 and 6 describe the experimental setup, results, and ablation studies conducted to evaluate our approach. Finally, we summarise the key findings and conclude the paper in Section 7.

2. Related Work

2.1. Datasets and Benchmarks

Publicly available ship hull datasets are mainly collected in underwater or dry-dock settings and are not designed for UAV-based hull stitching. The LIACi benchmark (Waszak, Cardaillac, Elvesæter, Rødølen and Ludvigsen, 2023) provides underwater ship inspection images with pixel-level annotations in multiple categories, including classes related to the hull. MaVeCoDD (Chliveros, Tzanetatos and Kamzelis, 2021) focuses on dry-dock hull corrosion evidence with manually annotated regions of interest.

On the UAV side, existing maritime datasets such as SeaDronesSee (Varga, Kiefer, Messmer and Zell, 2022) target open-water search-and-rescue style detection and tracking from varying altitudes, and the Aerial Vessels Detection Dataset (Makrigiorgis, Kolios and Kyrkou, 2022) targets wide-area marine monitoring with object-level annotations (e.g., shipboat person). These datasets differ fundamentally from the requirements of UAV-acquired ship-hull-surface image stitching: they typically lack close-range hull surface coverage, high-overlap view sequences curated for mosaicing, and alignment-orientated evaluation protocols. Therefore, to the best of our knowledge, currently there is no public dataset dedicated to UAV-acquired ship-hull imagery specifically for image stitching benchmarking.

2.2. Early Image Stitching Methods

Image stitching refers to the end-to-end process of merging overlapping images into a single composite mosaic. Within this pipeline, the key step is geometric registration, also referred to as image alignment, which estimates the mapping between views before compositing and blending are applied to suppress seams and visual discontinuities (Wei, Zhong, Lang and Yi, 2019; Sakharkar and Gupta, 2013). Early stitching systems typically relied on simple parametric transforms, such as translation, rotation, scaling, and planar projective warps, sometimes with manual assistance or coarse initialisation. In this setting, registration was achieved either by direct optimisation of image intensities or by sparse correspondences extracted from salient structures (Jia and Tang, 2005; Wei et al., 2019).

Direct pixel-based registration minimises photometric discrepancies in the overlap region (Jia and Tang, 2005). Although this operation is effective under mild viewpoint changes, it is sensitive to illumination variation and tends to degrade when a parallax or nonplanar structure violates a single global warp assumption. After registration, stitch quality is often dominated by the compositing stage; gradient domain formulations and related seam suppression strategies improve visual continuity in the final mosaic and reduce artifacts caused by exposure differences and small residual misregistration (Zomet, Levin, Peleg and Weiss, 2006; Levin, Zomet, Peleg and Weiss, 2004). To further improve robustness in challenging acquisition conditions, parallax-aware stitching strategies have been explored by incorporating additional constraints beyond a single planar model, allowing more reliable mosaics when viewpoint changes are significant (Zhi and Cooperstock, 2012).

2.3. Feature Detection and Matching

Feature-based stitching algorithms normally operate by establishing correspondences between distinct keypoints in overlapping regions (Yang, Yin, Xu, Jing, Jiang, Liao and Guedes Soares, 2025). Mature extraction techniques have improved the identification of areas that overlap within unordered image sets, enhancing both robustness and computational efficiency (Adel, Elmogy and Elbakry, 2014). Foundational algorithms such as SIFT (Lowe, 1999, 2004), SURF (Bay, Tuytelaars and Van Gool, 2006; Bay, Ess, Tuytelaars and Van Gool, 2008) and FAST (Rosten and Drummond, 2006; Viswanathan, 2009) provide arbitrary scale, rotation and illumination keypoint detection. Specifically, SIFT-based registration (Min, Jiguo and Xusheng, 2012; Zhang, Jin and Wang, 2017; Wang, Tu, Wu, Chen and Feng, 2018) effectively addresses scale variations and mitigates artefacts such as ghosting, while optimising transformation matrices further reduces geometric distortion (Qu, Lin, Ju and Liu, 2015).

Beyond point-based features, enhanced extraction techniques have expanded to include line segment detection. Approaches utilising SIFT features of the orientated line segment (Zhu and Ren, 2014) demonstrate strong resistance to

resolution and illumination changes. Furthermore, combining modified SURF matching with multi-band blending has been shown to achieve faster and seamless integration (Juan and Oubong, 2010). Collectively, these methods facilitate reliable matching across varying perspectives (Hassaballah, Abdelmgeid and Alshazly, 2016) and enable automatic image registration with minimal manual intervention (Noble, 2016), thus producing coherent mosaics with reduced distortion (Wang and Yang, 2020).

2.4. Deep Learning-Based Image Stitching

Deep learning models have replaced hand-crafted feature extractors by using large-scale datasets to learn hierarchical representations with superior generalisation (LeCun, Bengio and Hinton, 2015; Shrestha and Mahmood, 2019). In image stitching, Convolutional Neural Networks (CNNs) (LeCun, Bottou, Bengio and Haffner, 2002; Krizhevsky, Sutskever and Hinton, 2012) facilitate transfer learning and intricate pattern recognition, enabling robust homography estimation even in scenes with large-scale variations or significant depth differences where conventional methods fail (DeTone, Malisiewicz and Rabinovich, 2016; Nguyen, Chen, Shivakumar, Taylor and Kumar, 2018; Wang, Yu and Li, 2020; Kang, Wei, Jiang and Xie, 2019; Wang, Yi, Zhou, Wang, Yi and Gao, 2024).

To address the limitations of supervised approaches, unsupervised frameworks have recently advanced the field. The UDIS framework (Nie, Lin, Liao, Liu and Zhao, 2021c) introduced a coarse-to-fine strategy, employing a dual-branch reconstruction network that combined both low-resolution deformation and high-resolution refinement to achieve high quality without labelled data. Subsequent research prioritised efficiency, for example, the fast unsupervised model proposed in (Ni, Li, Ke, Zhang, Cao and Yang, 2024a) integrates an adaptive feature extraction module with a lightweight stitch restoration network, delivering greater precision and processing speed. More recently, (Wang, Zhang, Dai, Cheng and Wang, 2025) enhanced UDISNet by incorporating EPISNets large baseline depth homography network and an AdaPool layer for alignment, along with an EPDNet edge detection module for reconstruction, producing superior RMSE, PSNR, and SSIM (Wang, Bovik, Sheikh and Simoncelli, 2004) metrics.

Beyond alignment, Generative Adversarial Networks (GANs) (Goodfellow, Pouget-Abadie, Mirza, Xu, Warde-Farley, Ozair, Courville and Bengio, 2014) are critical for seam management and blending. By predicting pixel values in transition regions based on extensive data distributions, GANs effectively eliminate visible inconsistencies and synthesise realistic content, ensuring structural continuity in the final mosaic (Wu, Zheng, Zhang and Huang, 2019; Jabbar, Li and Omar, 2021; Cheng, Yang, Chen, Yuan and Tao, 2023; Jia, Li, Zhang, Song and Song, 2024). However, despite these algorithmic advances, the stitching of the hull image remains uniquely challenging due to monotonous low-texture regions, limited overlap, and large viewpoint variations (Yan, Mei, Xu, Yu, Sun, Wang and Chen, 2023). Although generalised deep learning models perform well on natural scenes, they frequently suffer from domain shift when applied to maritime environments, leading to spatial distortions and structural inconsistencies (Wei et al., 2019).

3. The ShipHull66 Dataset

To address the lack of dedicated benchmarks for maritime inspection, we introduce *ShipHull66*, the first large-scale dataset specifically curated for UAV-acquired hull image stitching. The construction of this benchmark addresses three domain-specific challenges: (1) *Restricted Access*, which strictly limits spatial and temporal windows for data collection in port zones; (2) *Dynamic Instability*, where vessel motion and attitude variations necessitate adaptive acquisition methodologies; and (3) *Operational Complexity*, requiring precise UAV manoeuvring to ensure data usability for dense matching. We developed a systematic acquisition pipeline using the DJI Mavic 3 Pro platform to ensure diverse, high-fidelity coverage under these constraints.

3.1. Data Acquisition Protocols

We collected 164 high-definition videos totalling 157.3 GB and covering 66 distinct vessels. To adapt to varying port regulations and vessel states, two complementary acquisition protocols were implemented.

Phase I—Close-Range Lateral Scanning: Using stationary vessels in accessible zones to target the vessels, the UAV performed lateral scanning trajectories at close range without optical magnification. This protocol captured high-resolution surface details of four static hulls. Although offering superior texture fidelity, this method is inherently constrained by strict proximity permissions in complex port environments, limiting its scalability.

Phase II— Long-Range Telephoto Tracking: To capture dynamic vessels efficiently, we utilised a high-altitude hovering strategy that uses the 28× hybrid zoom capabilities of the Mavic 3 Pro. The camera was tracked and rotated in synchronisation with the vessels during port entry and exit operations. This long-focal-length approach offers two distinct advantages: it enables safe data capture from a standoff distance and naturally compresses perspective distortion, yielding orthographic-like sequences highly suitable for planar stitching analysis. The resulting dataset documents dynamic hull kinematics and diverse environmental conditions, with raw footage organised by vessel ID and timestamps. Representative samples illustrating the diversity of acquisition scenarios are presented in Figure 1.

3.2. Data Preprocessing and Pair Generation

A rigorous preprocessing pipeline was implemented to standardise the various resolutions and frame rates of the two acquisition phases into a unified benchmark format suitable for unsupervised learning.

Figure 1: Representative samples from the raw video dataset, illustrating the diversity of hull appearances, lighting conditions, and acquisition distances prior to frame extraction.

Resolution Standardisation and Sampling Custom strategies were applied to normalise the data into pairs with controlled overlap. For Phase I (Close-Range Static), 4K footage (3840 × 2160, 30 fps) was downsampled by a factor of 4 to 960 × 540 pixels. The reference images (I_r) were sampled every 20 frames and the corresponding target images (I_t) were extracted with a fixed temporal offset of 60 frames relative to I_r. This baseline interval was calibrated to ensure sufficient overlap while introducing the necessary parallax for homography estimation. For Phase II (Telephoto Dynamic), the FHD footage (1920 × 1080, 50 fps) was resized similarly to the 960 × 540 baseline. To account for higher frame rates and angular velocity, the sampling interval for I_r remained at 20 frames, while the I_t offset was increased to 75 frames to maintain geometric consistency with Phase I.

Quality Control After extraction, image pairs exhibiting motion blur or insufficient overlap (typically less than 30%) were filtered by automated thresholds and manual verification. This process yielded two standardised subsets: the Static Scan dataset (Figure 2) and the Telephoto Dynamic dataset (Figure 3), both formatted for immediate use in stitching frameworks.

3.3. Statistics and Evaluation Protocols

ShipHull66 comprises 28,944 image pairs derived from 66 vessels, representing the largest domain-specific benchmark for hull image stitching to date. The distribution of image pairs between individual vessels is illustrated in Figure 4. To ensure rigorous benchmarking, we established specific data splits for training and evaluation.

Training Split To balance computational efficiency with representational diversity, seven representative vessels were selected for the training set, including Xinpu Dong, GUNDE MAERSK, ASL HONGKONG, Dongfang Hong 2, Kexue 1, OOCL CALIFORNIA, and COSCO OCEANIA. This subset comprises 3,700 pairs of images, carefully chosen to cover a spectrum of hull colours, corrosion levels, and lighting conditions, providing a solid foundation for unsupervised feature learning.

Evaluation Splits The remaining data were reserved strictly for testing model performance. We designated a Visual Testing Set comprising three vessels (Lanhai 101, LEPTION, and GSL MARIA) with a total of 1,059 pairs to strictly assess seam handling and structural alignment in challenging scenarios. Furthermore, a Generalisation Benchmark was formed from the remaining 56 vessels. After samples compromised by extreme environmental factors such as heavy fog are removed, this extensive segment is used to validate the scalability and robustness of the proposed framework in unseen vessel types and variable maritime environments.

4. MTEA-StitchNet: A Multi-task Edge-Aware Image Stitching Network

To establish a robust baseline for the ShipHull66 benchmark and address the inherent challenge of texture-sparse alignment, we propose a Multi-task Edge-Aware Image Stitching Network, namely, MTEA-StitchNet. In contrast to generic stitching pipelines that rely solely on photometric intensity, MTEA-StitchNet is explicitly designed to leverage structural edge priors to guide the registration process. As illustrated in Figure 5, the network adopts a coarse-to-fine strategy integrated with multi-task learning. This network comprises three synergistic components, including (1) a hierarchical feature extraction backbone, (2) an explicit Multi-scale Edge Extraction Branch (MSEEB) supervised by Dice Loss (Milletari, Navab and Ahmadi, 2016) to recover geometric boundaries, and (3) an Edge-Aware Image Stitching Branch (EAISB).

Specifically, the MTEA-StitchNet extracts multi-scale features to capture both local details and global context. For registration, deep features at downsampling 16× are utilised to estimate a global Homography matrix for coarse alignment, while refined 8× features drive a local Thin-Plate Spline (TPS) transform for fine-grained deformation. This dual-stage design, reinforced by edge attention, ensures that the network prioritises geometric consistency, effectively mitigating the alignment artefacts common in monotonous hull imagery. It should be noted that the edge extraction branch functions as an auxiliary task that encourages the

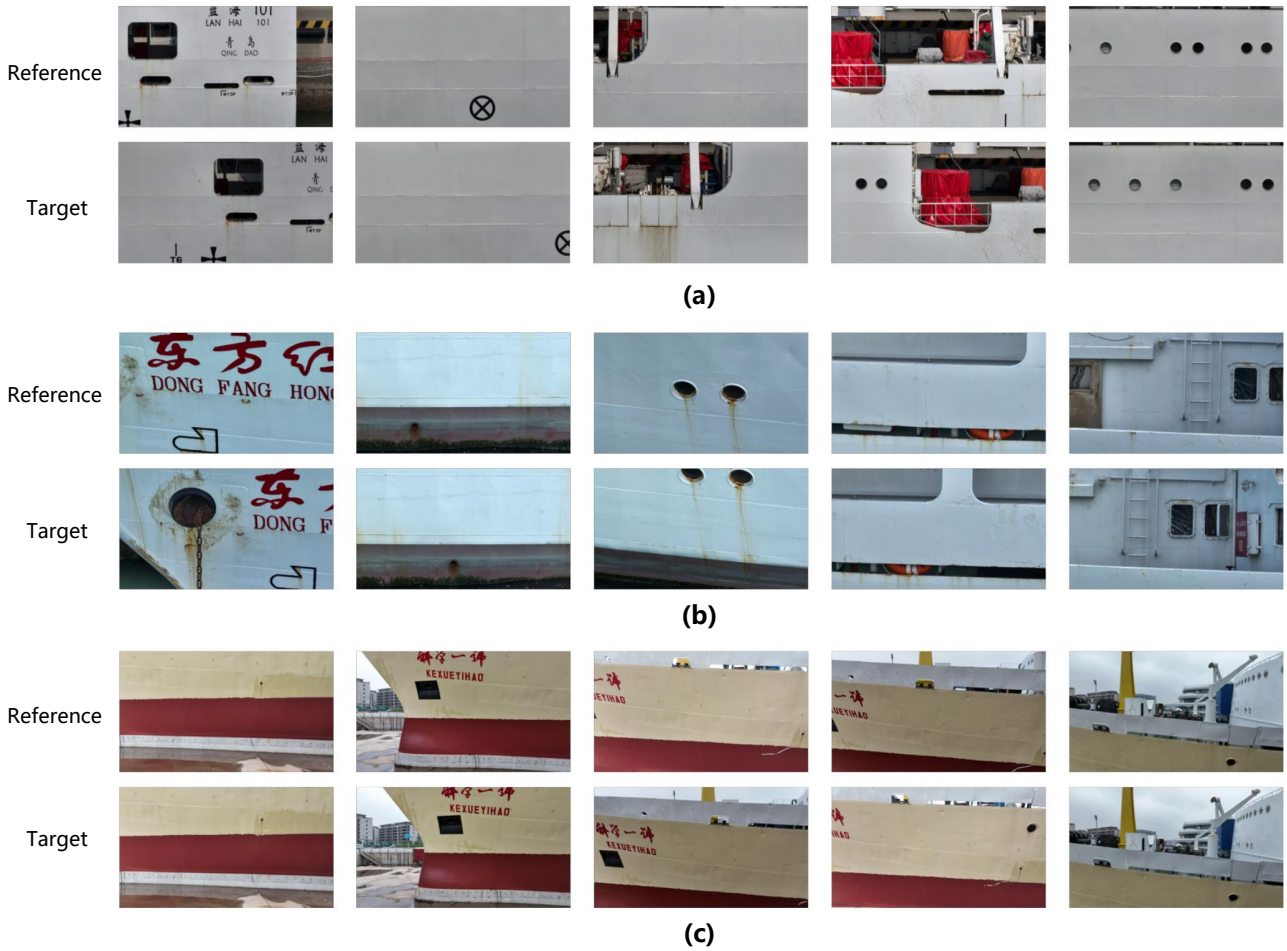

Figure 2: Sample image pairs from the Static Scan subset. These images exhibit high surface detail captured at close range, serving as a baseline for texture-sparse alignment.

backbone to learn structure-preserving features during the training process, while at the testing process this branch will be discarded and the stitching model trained operates solely on RGB image pairs.

4.1. Backbone

Given the input reference image I_r and target image I_t, we employ a ResNet-50 (He, Zhang, Ren and Sun, 2016) backbone pre-trained on ImageNet (Deng, Dong, Socher, Li, Li and Fei-Fei, 2009) to extract hierarchical feature representations. We utilize feature maps from the five convolutional blocks, denoted as $\{F^l\}_{l=1}^{5}$, with spatial resolutions ranging from $1/2$ to $1/32$ of the input size. These multi-scale features account for the significant scale variations of hull components (e.g., large rust patches vs. thin railing lines) and serve as shared inputs for both the image stitching branch and the auxiliary edge extraction branch.

4.2. Multi-scale Edge Extraction Branch

The feature extraction module serves as the foundation of MTEA-StitchNet, designed to simultaneously capture high-level semantic context for alignment and fine-grained structural boundaries for geometric consistency.

To explicitly recover structural cues from texture-sparse hull imagery, we integrate a parallel Multi-scale Edge Extraction Branch (MSEEB) based on Scale-Correlated Pyramid Convolution (SCPC) (Wu, Liu, Zhang, Cheng and Ren, 2022). For each feature level F^l, the SCPC block splits the channel dimensions into four groups and applies dilated convolutions with varying rates to expand the receptive field without losing resolution. Specifically, to capture diverse geometric patterns, we set the dilation rates to $\{1, 2, 4, 8\}$ for the first three stages (focusing on global structure) and $\{1, 2, 3, 4\}$ for the latter two stages (refining local details).

The extracted multi-scale edge features are aggregated via a weighted fusion mechanism. Recognizing that edge information at different scales contributes unequally to the registration task, we introduce learnable coefficients λ_l to adaptively weight the contribution of each stage. The fusion process operates in a bottom-up manner, recursively upsampling and combining features:

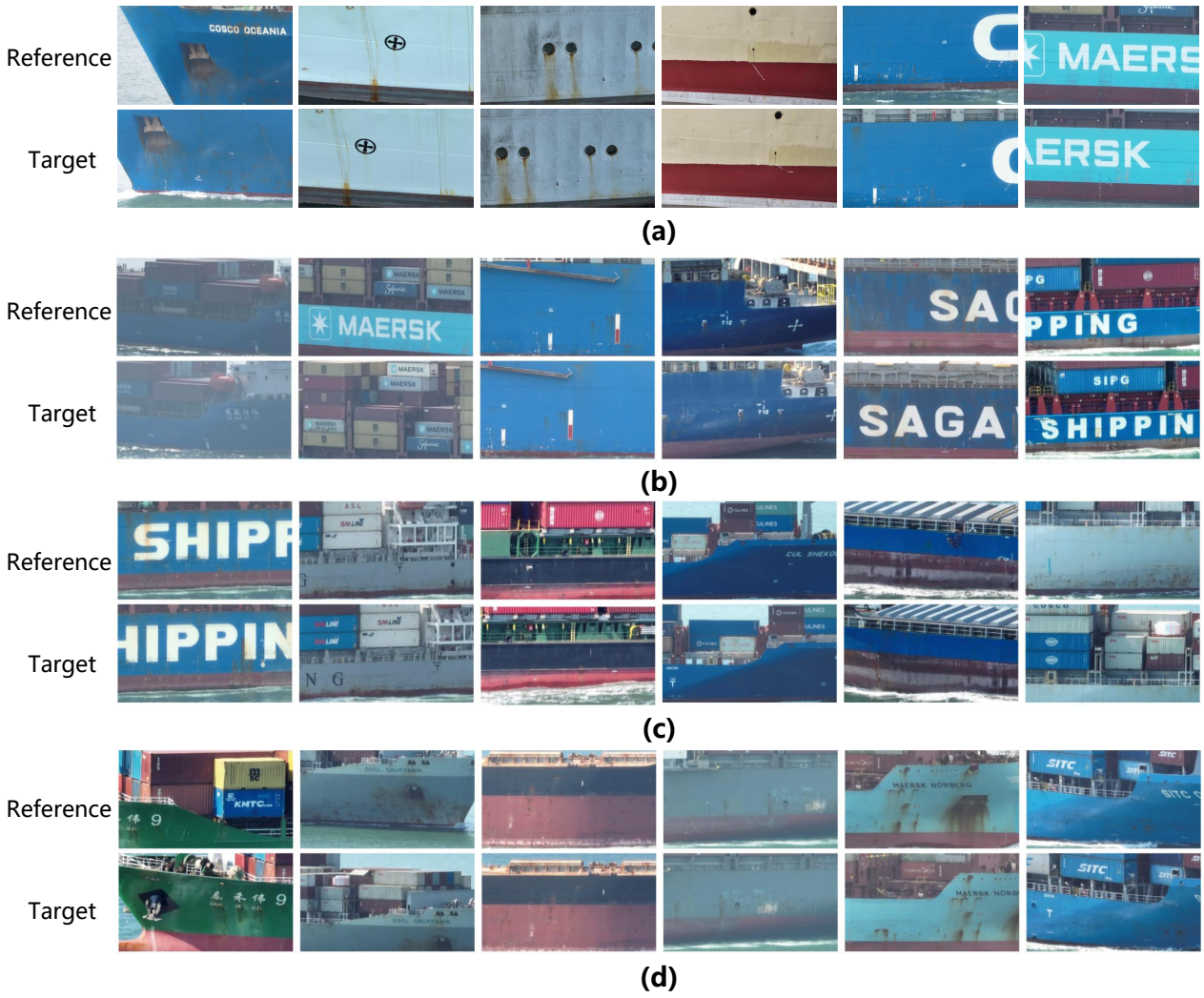

Figure 3: Sample image pairs from the Telephoto Dynamic subset. Acquired at 28× zoom, these pairs capture the overall hull structure with reduced perspective distortion but introduce challenges related to dynamic motion.

$$\hat{F}^{l}_{edge} = \lambda_l \cdot \mathcal{U}\left(\mathrm{Conv}_{1\times1}(\hat{F}^{l+1}_{edge} + \Phi_{\mathrm{SCPC}}(F^{l}))\right), \quad l \in \{1, \dots, 4\} \tag{1}$$

where Φ_{SCPC} denotes the SCPC operation, $\mathcal{U}$ represents bilinear upsampling, and the recursion is initialized with $\hat{F}^{5}_{edge} = \lambda_5 \cdot \mathrm{Conv}_{1\times1}(\Phi_{\mathrm{SCPC}}(F^{5}))$.

Finally, the fused feature map at the highest resolution $\hat{F}^{1}_{edge}$ is passed through a projection layer and a Sigmoid activation $\sigma(\cdot)$ to generate the final binary edge map M_{edge}:

$$M_{edge} = \sigma\left(\mathrm{Conv}_{1\times1}\left(\mathrm{Conv}_{3\times3}(\hat{F}^{1}_{edge})\right)\right). \tag{2}$$

This generated edge map provides explicit supervision via the Dice Loss, forcing the network to attend to reliable geometric boundaries rather than ambiguous texture patterns during the alignment process.

4.3. Edge-Aware Image Stitching Branch

To achieve robust and visually consistent stitching in challenging maritime environments, we introduce an Edge-Aware Image Stitching Branch (EAISB) that jointly considers geometric alignment and seam-aware composition. This branch is designed to preserve critical structural edges while mitigating misalignment caused by low-texture regions, non-planar hull surfaces, and residual parallax. The EAISB consists of a Coarse-to-Fine Image Registration Module for accurate global and local alignment, followed by an Image Composition Module that performs adaptive blending in overlapping regions.

4.3.1. Coarse-to-Fine Image Registration Module

The coarse-to-fine image registration module leverages deep feature correlations and a specialized attention mechanism to progressively estimate a global homography followed by a non-rigid Thin-Plate Spline (TPS) transform. The registration module operates hierarchically, utilizing the multi-scale deep features extracted in Section 4.1.

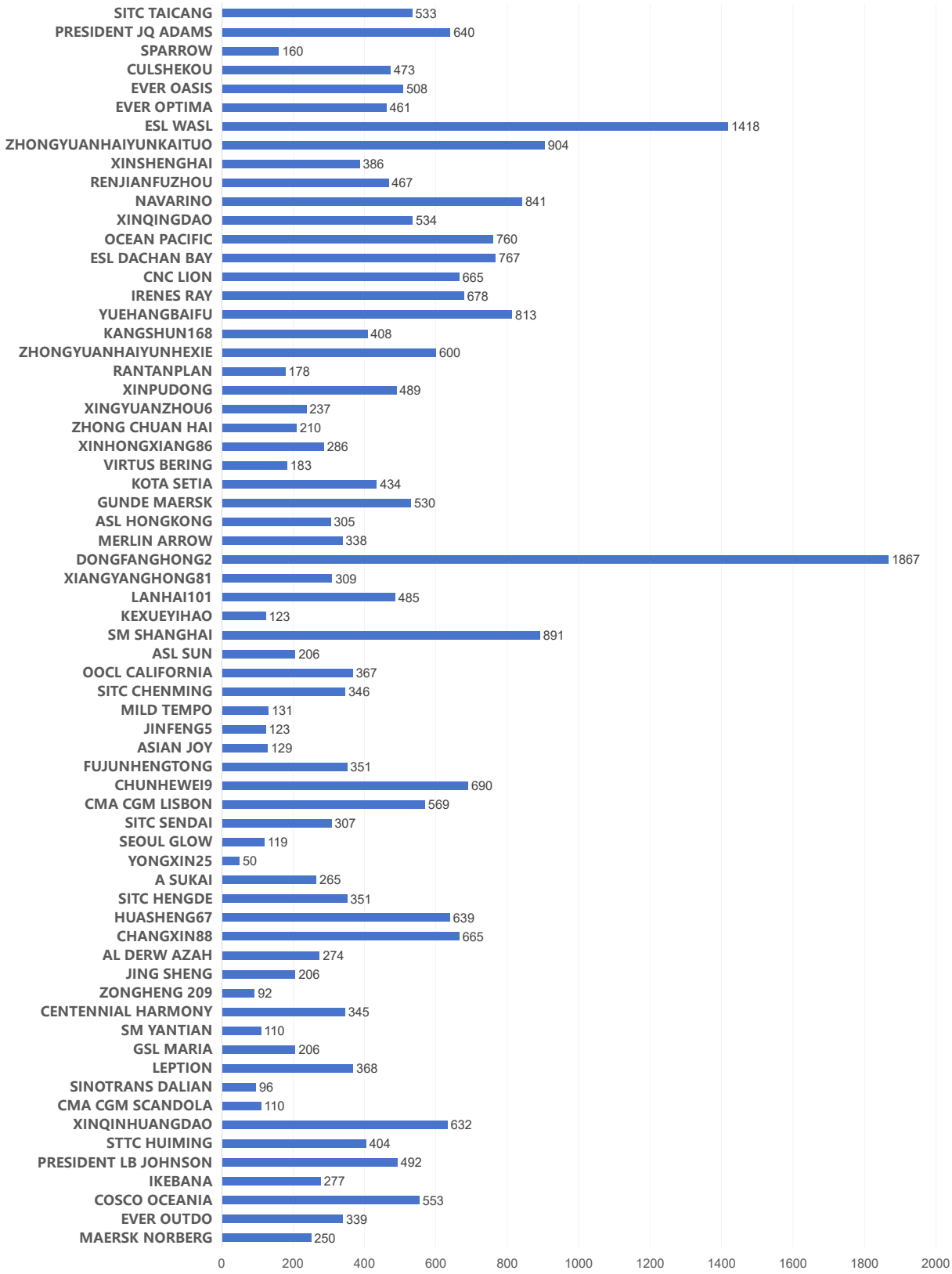

Figure 4: Statistical distribution of image pairs across the 66 vessels in the ShipHull66 dataset. The long-tailed distribution ensures that the dataset covers both extensively documented vessels and those with fewer samples to test model adaptability.

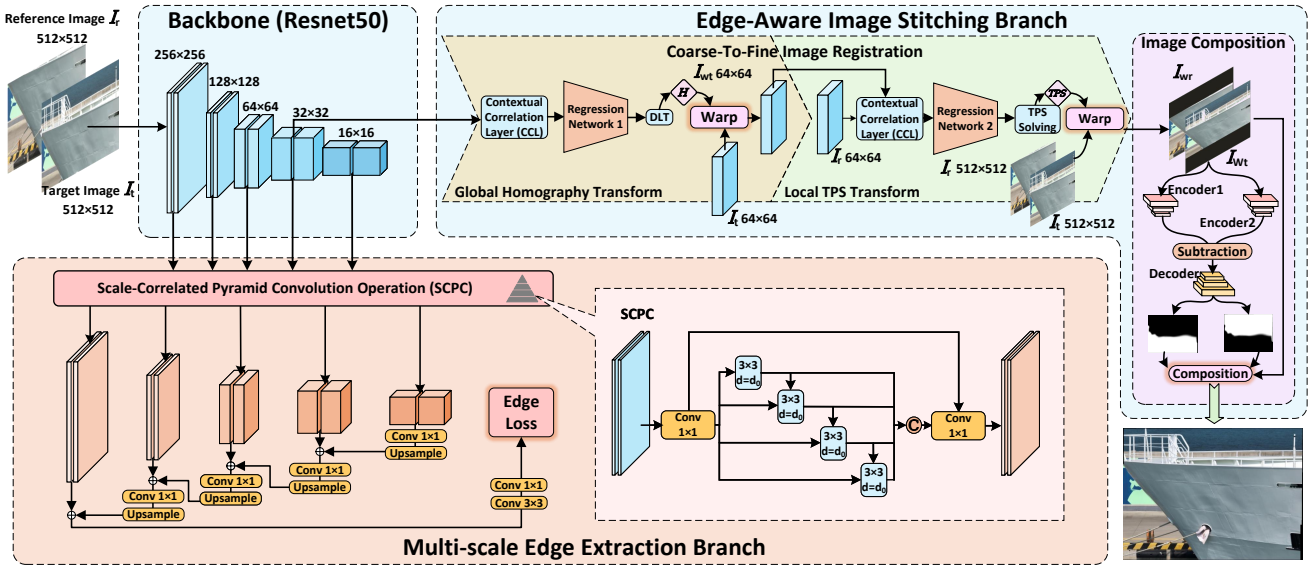

Figure 5: The architecture of the proposed Multi-task Edge-Aware Image Stitching Network (MTEA-StitchNet). This network consists of a backbone, a Multi-scale Edge Extraction Branch (MSEEB) and an Edge-Aware Image Stitching Branch (EAISB). The backbone is shared by the MSEEB and EAISB during the training stage, while it will be solely used by the EAISB in the testing stage. In essence, the MSEEB guides the backbone toward learning structure-preserving features, which are useful for the image registration module. This module is designed on top of a coarse-to-fine strategy, utilizing global homography for initial alignment and local TPS transform for refinement, supervised by both alignment and edge-consistency losses. An image composition module follows the registration module and the output is a stitched image.

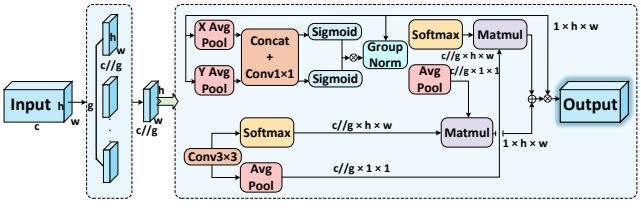

Figure 6: The structure of the Efficient Multi-scale Attention (EMSA) mechanism. It aggregates multi-scale context via parallel 1×1 and 3×3 branches to enhance feature distinctiveness.

Efficient Multi-scale Attention. Standard convolutional operations often struggle to distinguish subtle structural features in low-texture hull regions. To address this, we integrate the Efficient Multi-Scale Attention (EMSA) mechanism (Ouyang, He, Zhang, Luo, Guo, Zhan and Huang, 2023) directly into the regression sub-networks. As shown in Figure 6, EMSA captures pixel-level pairwise relationships through two parallel branches: a 1×1 convolutional branch that models channel-wise dependencies and a 3×3 convolutional branch that captures cross-dimensional spatial context. By aggregating these branches via a cross-spatial learning strategy, EMSA effectively suppresses ambiguity in texture-less areas and focuses the network on reliable geometric cues.

Global Homography Transform. We first utilize the $1/16$ scale features, denoted as F^4, to estimate the global planar transform. To measure feature similarity, we employ a Contextual Correlation Layer (CCL) (Nie, Lin, Liao, Liu and Zhao, 2021a). The correlation volume $\boldsymbol{C}$ at coordinate (x, y) is computed as:

$$C(x, y) = \sum_{i,j} \frac{\langle F_r^{x+i,y+j},\ F_t^{x+i,y+j} \rangle}{\| F_r^{x+i,y+j} \| \cdot \| F_t^{x+i,y+j} \|}, \tag{3}$$

where $\langle \cdot, \cdot \rangle$ denotes the inner product within a local window.

The generated feature correlation volume is then processed by a regression network to predict the 4-point homography parameterization. As illustrated in Figure 7, this regression network consists of three stacked CNN blocks. Each block sequentially applies a convolution, ReLU activation, an EMSA module to enhance feature saliency, and a max-pooling layer. This design ensures that the predicted global homography matrix $\mathbf{H}$ is robust to illumination variations and local noise.

Local TPS Transform. Global homography assumes a planar scene, which may not hold for curved hull surfaces. To correct local non-rigid distortions, we perform a refinement step using the $1/8$ scale features (F^3). The target features F_t^3 are first pre-aligned using the estimated $\mathbf{H}$ and correlated with F_r^3.

A secondary regression network, sharing the same EMSA-enhanced architecture, predicts the residual motion for a grid of $(U + 1) \times (V + 1)$ control points. These points define a Thin-Plate Spline (TPS) transform (Kent and Mardia, 1994; Nie et al., 2023). The mapping of an arbitrary point p to its warped location p' is parameterized by minimizing an

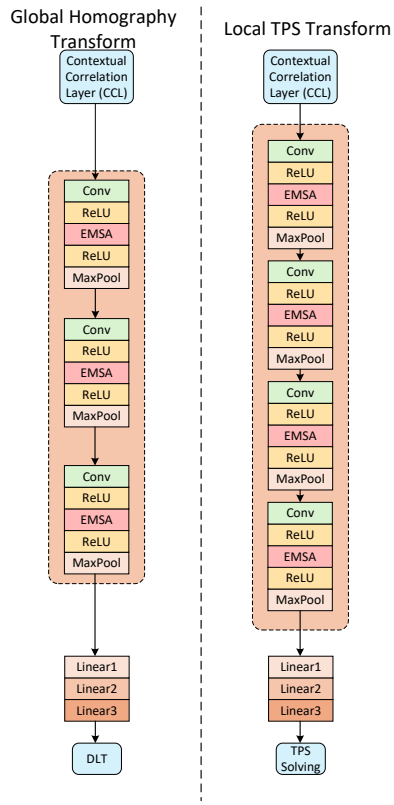

Figure 7: The structures of the Global Homography Transform and the Local TPS Transform within the registration branch. The EMSA mechanism is embedded into the convolutional blocks of both the Global Homography and Local TPS regression heads to refine feature correlation.

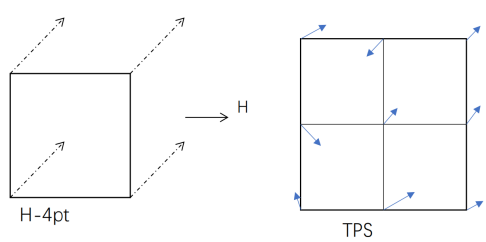

Figure 8: The schematic diagram of the Thin-Plate Spline (TPS) transform, illustrating the flexible deformation grid used for local refinement.

energy function comprising data and smoothness terms:

$$p' = \mathbf{C} + \mathbf{M} \cdot p + \sum_{i=1}^{N} w_i \, \phi(\|p - p_i\|^2), \tag{4}$$

where $\mathbf{C} \in \mathbb{R}^2$ and $\mathbf{M} \in \mathbb{R}^{2\times 2}$ represent the affine components, w_i are the weights for the N control points p_i, and $\phi(r) = r^2 \log r^2$ is the radial basis function. This formulation allows the network to elastically deform the target image to match the reference, correcting local misalignments while preserving the global structure (Figure 8).

4.3.2. Image Composition

Given the two geometrically aligned images obtained in the registration branch, the warped reference image I_{wr} and the warped target image I_{wt}, we perform seam-aware blending using an image composition module. Although the preceding coarse-to-fine registration substantially reduces geometric discrepancies, residual parallax and local appearance inconsistencies may persist in the overlapping region due to non-planar hull structures, specular highlights, and reflection-induced intensity variations. Therefore, instead of directly reconstructing the stitched image from fused features, the composition module explicitly learns pixel-wise blending masks to suppress ghosting while preserving sharp structural boundaries.

As illustrated in Figure 5, the two warped images are first fed into two encoders (Encoder1 and Encoder2) that share the same architecture and parameters, enabling both paths to extract multi-scale representations within a common feature space. The encoded features extracted from the two paths are then combined through a subtraction operation, i.e., a feature-difference aggregation, which emphasizes regions with strong inter-image disagreement and provides a direct cue for seam placement. The resulting difference features are subsequently forwarded to a decoder that predicts two composition masks, denoted as M_{cr} and M_{ct}, corresponding to the warped reference and warped target images, respectively.

The final stitched output S is produced by a differentiable composition operation:

$$S = M_{cr} \odot I_{wr} + M_{ct} \odot I_{wt}, \tag{5}$$

where $\odot$ denotes element-wise multiplication, I_{wr} denotes the warped reference image and I_{wt} denotes the warped target image. In this way, the composition module assigns higher weights to the locally more reliable content and implicitly constructs a soft seam in the overlapping region, thereby reducing visible stitching artifacts under residual parallax. During the training stage, the masks are regularized to encourage spatial smoothness and edge consistency, in order that the blending transition is gradual in homogeneous areas while avoiding unnecessary cutting across salient structural edges.

4.4. Objective Function

The MTEA-StitchNet is optimized in an end-to-end manner using a composite objective function that enforces photometric alignment, geometric regularity, and structural edge consistency.

4.4.1. Photometric Alignment Loss

To ensure pixel-level consistency between the aligned images, we minimize the photometric error in the overlapping regions. Let $\mathcal{W}(I, \mathbf{T})$ denote the warping operation applied to image I using transform parameters $\mathbf{T}$. To handle the non-overlapping areas, we introduce a binary mask $\mathbf{M} = \mathcal{W}(\mathbf{1}, \mathbf{T})$, where $\mathbf{1}$ is an all-ones matrix of the same resolution as that of the image.

The alignment loss $\mathcal{L}_{\text{align}}$ jointly optimizes the global homography ($\mathbf{H}$) and local TPS ($\mathbf{T}_{\text{TPS}}$) transforms. It incorporates a bi-directional constraint for the homography stage to enhance robustness:

$$\begin{aligned}\mathcal{L}_{\text{align}} = &\mu \cdot \left\| I_r \cdot \mathcal{W}(\mathbf{1}, \mathbf{H}) - \mathcal{W}(I_t, \mathbf{H}) \right\|_1 \\ &+ \mu \cdot \left\| I_t \cdot \mathcal{W}(\mathbf{1}, \mathbf{H}^{-1}) - \mathcal{W}(I_r, \mathbf{H}^{-1}) \right\|_1 \\ &+ \left\| I_r \cdot \mathcal{W}(\mathbf{1}, \mathbf{T}_{\text{TPS}}) - \mathcal{W}(I_t, \mathbf{T}_{\text{TPS}}) \right\|_1, \end{aligned} \tag{6}$$

where $\|\cdot\|_1$ denotes the L_1 norm, and μ is a hyperparameter balancing the contribution of the coarse global alignment.

4.4.2. Geometric Distortion Loss

To prevent structural artifacts in non-overlapping regions and suppress projective distortions, we impose a grid-based distortion loss $\mathcal{L}_{\text{dist}}$. The TPS transform is discretized into a grid of control points, subject to intra-grid and inter-grid constraints.

The **Intra-grid constraint** $\mathcal{L}_{\text{intra}}$ penalizes grid edges $\vec{e}$ that undergo excessive scaling, defined as:

$$\begin{aligned}\mathcal{L}_{\text{intra}} = &\frac{1}{(U+1)V} \sum_{\vec{e} \in \mathcal{E}_{\text{hor}}} \sigma\left(\langle \vec{e}, \vec{i} \rangle - \frac{2W}{V} \right) \\ &+ \frac{1}{U(V+1)} \sum_{\vec{e} \in \mathcal{E}_{\text{ver}}} \sigma\left(\langle \vec{e}, \vec{j} \rangle - \frac{2H}{U} \right), \end{aligned} \tag{7}$$

where $\mathcal{E}_{\text{hor}}$ and $\mathcal{E}_{\text{ver}}$ represent horizontal and vertical edge sets, $\vec{i}$ and $\vec{j}$ are unit basis vectors, W, H are image dimensions, and $\sigma(\cdot)$ is the ReLU activation ensuring explicit magnitude bounds.

The **Inter-grid constraint** $\mathcal{L}_{\text{inter}}$ preserves linearity by encouraging consecutive edges $\vec{e}_{s1}, \vec{e}_{s2}$ to remain collinear:

$$\mathcal{L}_{\text{inter}} = \frac{1}{Q} \sum_{\{\vec{e}_{s1}, \vec{e}_{s2}\}} I_{s1,s2} \cdot \left(1 - \frac{\langle \vec{e}_{s1}, \vec{e}_{s2} \rangle}{\|\vec{e}_{s1}\| \cdot \|\vec{e}_{s2}\|} \right), \tag{8}$$

where Q is the number of edge pairs, and $I_{s1,s2}$ is a binary indicator set to 1 only if the pair lies within the non-overlapping region. The total distortion term is given by $\mathcal{L}_{\text{dist}} = \mathcal{L}_{\text{intra}} + \mathcal{L}_{\text{inter}}$.

4.4.3. Edge Consistency Loss

To enforce the preservation of structural boundaries described in Section 4.1, we utilize the Dice Loss (Milletari et al., 2016). We generate pseudo-ground-truth edge maps G using a pre-trained HED detector (Xie and Tu, 2015). The loss minimizes the discrepancy between G and the edge map M_{edge} predicted by our network:

$$\mathcal{L}_{\text{dice}} = 1 - \frac{2|G \cap M_{edge}|}{|G| + |M_{edge}| + \epsilon}, \tag{9}$$

where ϵ is a smoothing term. This supervision ensures that the network learns features consistent with salient geometric structures.

4.4.4. Total Objective

The final objective function is a summation of the alignment, distortion, and edge components:

$$\mathcal{L}_{\text{total}} = \mathcal{L}_{\text{align}} + \mathcal{L}_{\text{dist}} + \mathcal{L}_{\text{dice}}. \tag{10}$$

5. Experimental Setup

In this section, we introduce the data configuration, evaluation metrics and implementation details used in our experiments.

5.1. Data Configuration

To rigorously assess performance, we strictly follow the split protocols defined in Section 3. The training set consists of 3,700 image pairs from 7 representative vessels. For evaluation, we employ two distinct testing subsets: (1) a Standard Test Set comprising 3 vessels (Lanhai 101, LEPTION, and GSL MARIA) totalling 1,059 pairs, used for detailed quantitative and qualitative analysis; and (2) a Generalisation Test Set containing the remaining 56 vessels. This large-scale split allows us to verify the model's adaptability to unseen vessel types and varying acquisition conditions without fine-tuning.

5.2. Evaluation Metrics

To ensure a rigorous quantitative assessment and fair comparison with state-of-the-art benchmarks, we strictly adhere to the evaluation protocols established in the UDIS framework (Nie et al., 2021c). We employ the Peak Signal-to-Noise Ratio (PSNR) and the Structural Similarity Index (SSIM (Wang et al., 2004)) as the primary performance indicators. Consistent with the definition of the stitching task, these metrics are computed exclusively on the overlapping regions between the warped target image and the reference image. PSNR measures pixel-level reconstruction fidelity by quantifying the ratio between the maximum possible signal power and the power of corrupting noise. It is mathematically defined as:

$$\text{PSNR} = 10 \cdot \log_{10} \left(\frac{\text{MAX}_I^2}{\text{MSE}} \right), \tag{11}$$

where MAX_I represents the maximum possible pixel value (e.g. 255 for 8-bit images). The Mean Squared Error (MSE) is calculated on the overlapping pixels:

$$\text{MSE} = \frac{1}{N} \sum_{i=1}^{N} \| I_r(p_i) - \mathcal{W}(I_t(p_i)) \|^2, \tag{12}$$

where N is the number of pixels that overlap, I_r is the reference image, and $\mathcal{W}(I_t)$ is the warped target image.

Although PSNR focusses on absolute error, SSIM (Wang et al., 2004) provides a perceptual assessment by jointly modelling luminance, contrast, and structural information, which is critical for detecting misalignment in texture-sparse

hull imagery. The SSIM (Wang et al., 2004) between two image patches x and y is formulated as follows:

$$\mathrm{SSIM}(x, y) = \frac{(2\mu_x\mu_y + C_1)(2\sigma_{xy} + C_2)}{(\mu_x^2 + \mu_y^2 + C_1)(\sigma_x^2 + \sigma_y^2 + C_2)}, \quad (13)$$

where μ_x and μ_y denote the local means, σ_x^2 and σ_y^2 are the local variances and σ_{xy} is the covariance. The constants C_1 and C_2 are included to ensure numerical stability. Following the standard implementation (Wang et al., 2004), the final SSIM (Wang et al., 2004) score is the mean value computed throughout the overlapping region.

5.3. Implementation Details

The proposed method was implemented in PyTorch and trained on a Linux cluster with NVIDIA GeForce RTX 3090 GPUs. The input images were resized to 512×512 pixels for training efficiency. We utilised a ResNet-50 (He et al., 2016) backbone initialised with ImageNet-pretrained weights. The network was trained from scratch for 100 epochs with a batch size of 4. We used Adam optimiser (Kingma and Ba, 2014) with an initial learning rate of 1×10^{-5}, governed by an exponential decay scheduler (decay factor 0.97). To stabilise training, gradient clipping was applied with a maximum norm ℓ_2 of 3. The model selection was performed on the basis of the checkpoint achieving the minimum validation loss.

6. Experimental Results

To validate the efficacy of MTEA-StitchNet under domain-specific maritime constraints, we performed a comprehensive evaluation using the ShipHull66 benchmark. The experiments prioritize assessing alignment robustness in texture-sparse and repetitive-pattern scenarios, which constitute critical failure points for existing algorithms. We conducted quantitative benchmarking against state-of-the-art feature-based and deep learning methods, complemented by qualitative visual analysis to identify geometric artifacts. Additionally, ablation studies were executed to isolate and quantify the specific contributions of the edge-aware priors and the attention-aware registration mechanism.

6.1. Quantitative Evaluation

We first evaluate the registration accuracy on the three specific test hulls and the large-scale generalisation set. Table 1 summarises the quantitative comparison against the Identity baseline (no processing), feature-based methods (SIFT (Lowe, 2004)+RANSAC (Fischler and Bolles, 1981), SPW (Liao and Li, 2019), LPC (Jia, Li, Fan, Zhao, Teng, Ye and Latecki, 2021)) and learning-based approaches (UDIS (Nie et al., 2021c), UDIS2 (Nie et al., 2023)).

The LANHAI101 dataset, acquired via static scanning, represents the most difficult scenario with sparse textures and large parallax. Traditional methods struggle significantly here. In particular, while SIFT (Lowe, 2004)+RASAC yields a seemingly competitive PSNR (23.05 dB), this metric is misleading in this context. Since PSNR is computed exclusively on overlapping regions, a failed registration with a negligible overlapping area can artificially inflate the score. The true failure of SIFT (Lowe, 2004) is revealed by its extremely low SSIM (Wang et al., 2004) (0.486), indicating a complete loss of structural coherence. In contrast, MTEA-StitchNet achieves the highest performance in both metrics (24.21 dB / 0.879), validating the efficacy of the edge-aware module in texture-sparse environments.

For datasets collected via dynamic scenes (LEPTION & GSL MARIA), which offer richer textures but smaller parallax, MTEA-StitchNet consistently outperforms baselines in structural similarity. Although SIFT (Lowe, 2004)+RANSAC (Fischler and Bolles, 1981) achieves high PSNR values due to the pixel-level intensity matching of successful keypoints, its lower SSIM (Wang et al., 2004) scores (0.713 and 0.759) expose significant structural misalignments in non-salient regions. Our method maintains superior SSIM (Wang et al., 2004) (0.852 and 0.904), demonstrating that the attention-aware regression network effectively preserves geometric integrity throughout the hull surface.

To assess scalability, we evaluated the models on the remaining 56 vessels (Generalisation Set) without fine-tuning. MTEA-StitchNet achieves the best overall performance (25.66 dB / 0.860). Among comparisons, SPW (Liao and Li, 2019) and LPC (Jia et al., 2021) outperform SIFT (Lowe, 2004) but fail to match deep learning-based UDIS2 (Nie et al., 2023). The UDIS (Nie et al., 2021c) method underperforms significantly, likely due to its lightweight design and aggressive image compression, which compromise the high-frequency details required for hull inspection. The results confirm that our framework generalises robustly to unseen vessel types and varying acquisition conditions.

6.2. Qualitative Visual Analysis

We also performed a visual inspection to analyse the geometric artefacts. Figures 9, 10, and 11 present qualitative comparisons in representative samples.

Figure 9 visualises the stitching results of the methods compared on LANHAI101. It can be clearly observed that SIFT (Lowe, 2004)+RANSAC (Fischler and Bolles, 1981) fails to establish an accurate correspondence in monotonous regions, leading to severe misalignment. UDIS (Nie et al., 2021c) exhibits blurring due to resolution constraints. MTEA-StitchNet produces a seamless stitch, effectively utilising edge priors to lock onto faint structural lines that other methods miss.

On GSL MARIA (Figure 10), traditional methods such as SPW (Liao and Li, 2019) and LPC (Jia et al., 2021) introduce visible ghosting artifacts and blurring in low-texture areas. UDIS2 (Nie et al., 2023), despite its strong quantitative score, suffers from local geometric distortions. Our method, reinforced by the dual-constraints of Homography and TPS, eliminates these artifacts, maintaining sharp features across the seam.

In the LEPTION scenario shown in Figure 11, while SIFT (Lowe, 2004)+RANSAC (Fischler and Bolles, 1981)

Table 1
Quantitative comparison of registration quality (PSNR/SSIM) on the standard test set (LANHAI101, LEPTION, GSL MARIA) and the generalization set (56 vessels). Best results are highlighted in **bold**.

Method	LANHAI101		LEPTION		GSL MARIA		Generalisation Set	
	PSNR (↑)	SSIM (↑)	PSNR (↑)	SSIM (↑)	PSNR (↑)	SSIM (↑)	PSNR (↑)	SSIM (↑)
$I_{3\times3}$(Identity baseline)	15.61	0.676	12.85	0.421	13.60	0.536	12.89	0.527
SIFT (Lowe, 2004)+RANSAC (Fischler and Bolles, 1981)	23.05	0.486	**26.30**	0.713	**27.29**	0.759	24.54	0.733
SPW (Liao and Li, 2019)	23.19	0.852	26.73	0.833	25.46	0.882	23.87	0.831
LPC (Jia et al., 2021)	23.80	0.867	24.37	0.826	25.37	0.891	24.75	0.852
UDIS (Nie et al., 2021c)	20.17	0.648	21.56	0.751	22.27	0.812	21.98	0.826
UDIS2 (Nie et al., 2023)	23.99	0.875	24.26	0.843	25.66	0.898	25.46	0.855
MTEA-StitchNet (Ours)	**24.95**	**0.888**	25.06	**0.862**	26.48	**0.923**	**26.12**	**0.873**

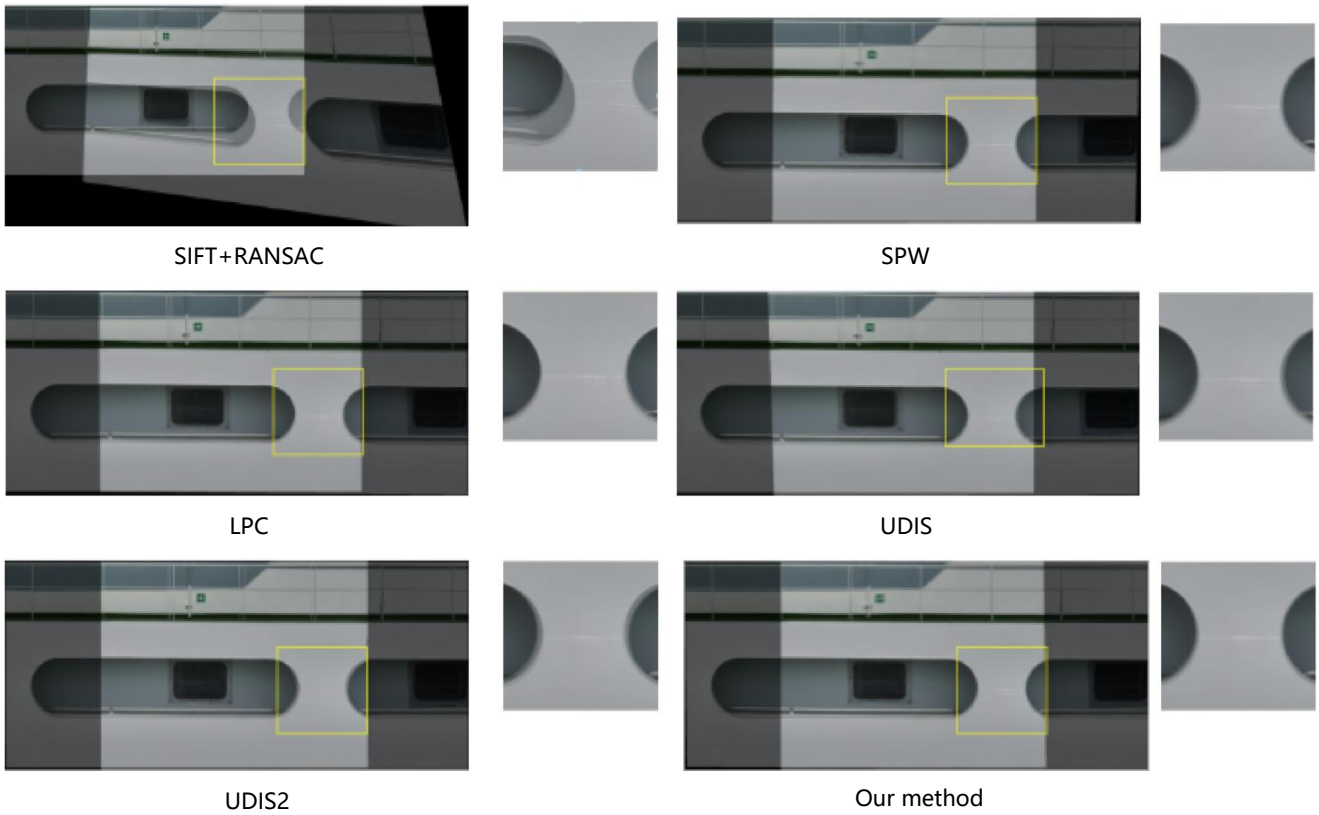

Figure 9: Qualitative comparison on the LANHAI101 dataset (static scan, low texture). SIFT (Lowe, 2004)+RANSAC (Fischler and Bolles, 1981) fails to align the hull structure, while our MTEA-StitchNet preserves boundary continuity.

and SPW (Liao and Li, 2019) align the overlapping centre correctly, they introduce severe projective distortions in the non-overlapping periphery (a common issue with unconstrained homography). LPC (Jia et al., 2021) and UDIS (Nie et al., 2021c) exhibit catastrophic deformation. MTEA-StitchNet preserves the natural geometry of the hull throughout the image, demonstrating the effectiveness of the grid-based distortion loss defined in Section 4.3.

6.3. Ablation Studies

To rigorously assess the contribution of each component within MTEA-StitchNet, we conducted a multi-level ablation study. We first evaluate the overall impact of the Multi-scale Edge Extraction Branch (MSEEB) and the Efficient Multi-scale Attention (EMSA) mechanism, followed by a detailed analysis of the internal design choices for each module.

6.3.1. Contribution of Key Components

We first examine the individual and combined effects of the MSEEB and the EMSA mechanism added to the baseline network. As shown in Table 2, the inclusion of either module yields consistent improvements in PSNR and SSIM (Wang et al., 2004) on all datasets compared to baseline. Specifically, the *Baseline+MSEEB* configuration improves structural similarity (e.g., SSIM +0.004 on LANHAI101), verifying that edge priors assist in geometric alignment. The *Baseline+EMSA* configuration further enhances performance by refining feature correspondence.

Most importantly, the proposed method (integrating both MSEEB and EMSA) achieves the highest performance

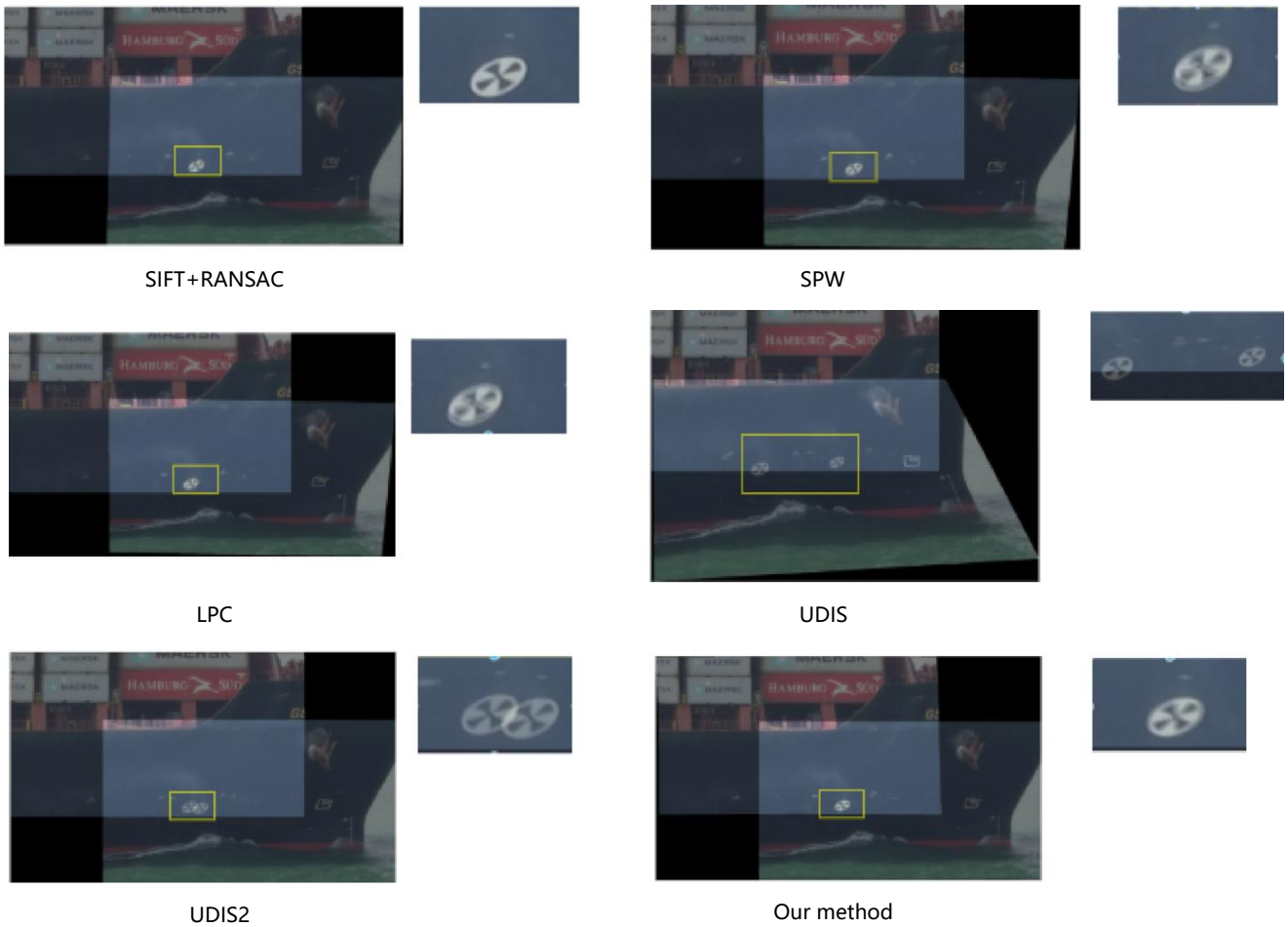

Figure 10: Qualitative comparison on the GSL MARIA dataset. Red boxes highlight ghosting artifacts present in the results of baseline methods, which are effectively suppressed by our approach.

Table 2
Ablation results of each module (Baseline, +MSEEB, +EMSA and Proposed Full Model)

Method	LANHAI101		LEPTION		GSL MARIA		Generalization Set	
	PSNR (↑)	SSIM (↑)	PSNR (↑)	SSIM (↑)	PSNR (↑)	SSIM (↑)	PSNR (↑)	SSIM (↑)
Baseline Model	23.99	0.875	24.26	0.843	25.66	0.898	25.46	0.855
Baseline + MSEEB	24.21	0.879	24.65	0.852	25.86	0.904	25.66	0.860
Baseline + EMSA	24.32	0.880	25.02	0.861	26.19	0.915	25.95	0.868
MTEA-StitchNet (Full)	**24.95**	**0.888**	**25.06**	**0.863**	**26.48**	**0.923**	**26.12**	**0.873**

(24.95 dB / 0.888 SSIM on LANHAI101). This superiority demonstrates that the two modules are complementary rather than redundant. That is to say, the MSEEB enforces boundary consistency, while the EMSA strengthens feature distinctiveness in texture-less regions, enabling the full model to handle the complex constraints of maritime inspection robustly.

6.3.2. Optimisation of the MSEEB

We further investigate the optimal scale configuration for the MSEEB using the *Baseline+MSEEB* setup. Table 3 compares the baseline with the four- and five-scale edge guidance strategies. Interestingly, introducing only four-scale guidance resulted in a degradation of SSIM (Wang et al., 2004) on the LEPTION dataset (dropping from 0.843 to 0.801). This counter-intuitive result suggests that low-level edge features alone may contain excessive high-frequency noise (e.g., water ripples), which disrupts global alignment when lacking high-level semantic constraints.

By extending the design to a five-scale strategy, the model captures global structural context from deep layers, effectively suppressing noise. This configuration consistently achieves the best performance (SSIM 0.879 on LANHAI101), confirming that multi-scale diversity with high-level semantic guidance is crucial for reliable edge-aware registration.

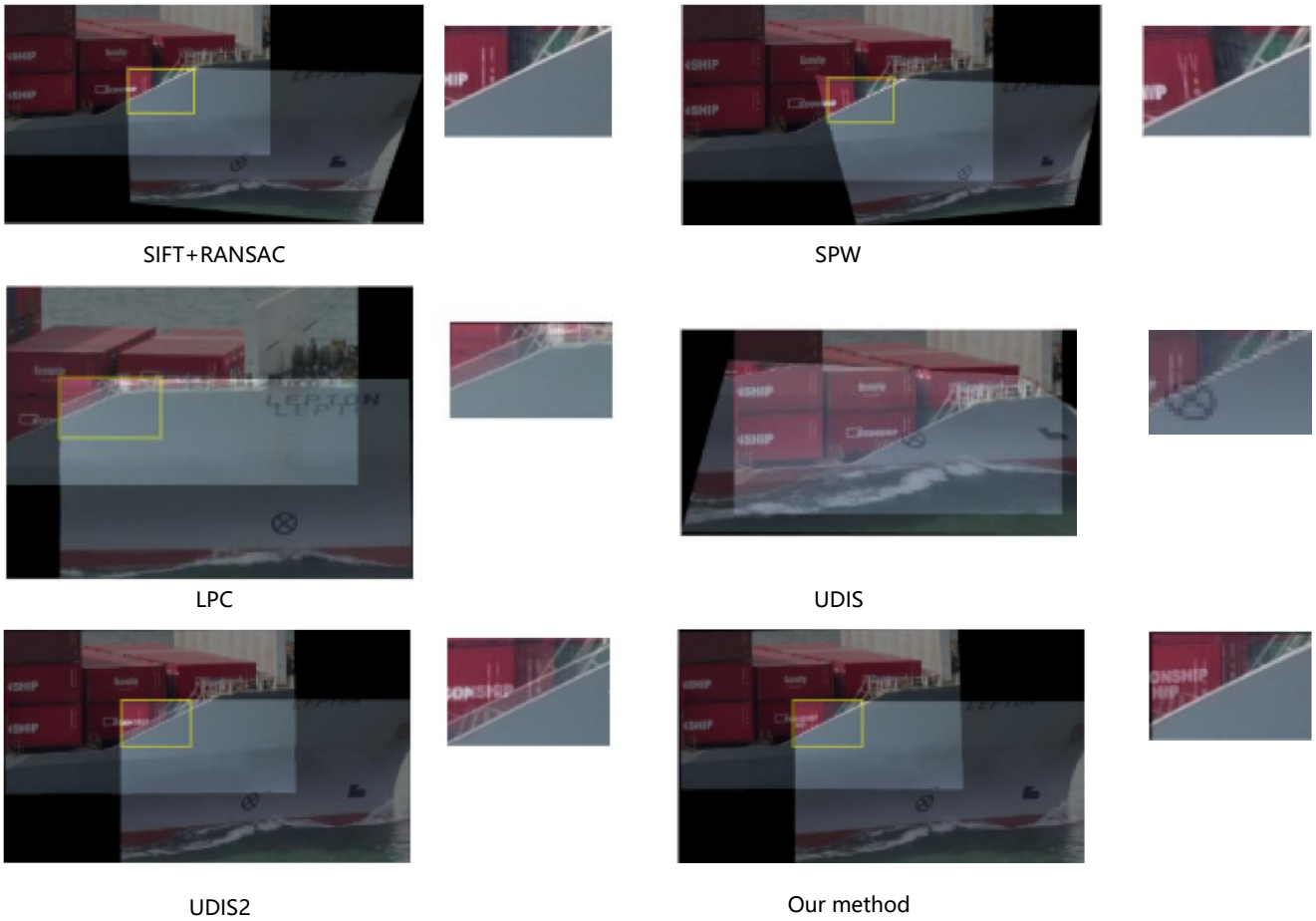

Figure 11: Qualitative comparison on the LEPTION dataset. Note the severe projective distortions in the non-overlapping regions produced by traditional methods, whereas MTEA-StitchNet maintains structural integrity.

Table 3
Ablation study of the Multi-scale Edge Extraction Branch (MSEEB) configuration (tested on Baseline + MSEEB).

Method	LANHAI101		LEPTION		GSL MARIA	
	PSNR (↑)	SSIM (↑)	PSNR (↑)	SSIM (↑)	PSNR (↑)	SSIM (↑)
Baseline Model	23.99	0.875	24.26	0.843	25.66	0.898
Four-Scale Edge Guidance	22.82	0.857	22.69	0.801	24.09	0.864
Five-Scale Edge Guidance	**24.21**	**0.879**	**24.65**	**0.852**	**25.86**	**0.904**

6.3.3. Analysis of Attention Mechanisms

We also evaluated the design of the attention mechanism using the *Baseline+EMSA* setup. First, we compare our EMSA module against established attention mechanisms (e.g., SE, CBAM, GCT) in Table 4. Our multi-scale approach consistently outperforms generic mechanisms, highlighting its suitability for the specific demands of registration tasks where pixel-level correspondence is key.

To understand the internal efficacy of EMSA, we decouple its branches in Table 5. We define the 1×1 channel branch as *Global Attention* and the 3×3 spatial branch as *Local Attention*. The results show that using either branch in isolation fails to achieve optimal performance. For instance, Global Attention alone causes a performance drop in LEPTION compared to baselines. However, the combined design (EMSA) achieves the highest scores (e.g., 24.32 dB on LANHAI101). This confirms that the cross-spatial learning strategy effectively leverages the complementary strengths of global channel context and local spatial details.

7. Conclusion

In this work, we addressed the scarcity of domain-specific benchmarks in automated maritime inspection by constructing and releasing ShipHull66, the first large-scale dataset dedicated to UAV-acquired hull image stitching. This dataset exposes the unique challenges of maritime environments-specifically texture sparsity and large parallax that generic computer vision datasets fail to represent. To validate the utility of this benchmark and provide a reference

Table 4
Comparison of different attention mechanisms (tested on Baseline + Attention).

Method	LANHAI101		LEPTION		GSL_MARIA	
	PSNR (↑)	SSIM (↑)	PSNR (↑)	SSIM (↑)	PSNR (↑)	SSIM (↑)
Standard Convolution	23.99	0.875	24.26	0.843	25.66	0.898
RCM (Ni, Chen, Zhai, Tang and Wang, 2024b)	24.14	0.877	24.73	0.856	26.19	0.913
IDC (Yu, Zhou, Yan and Wang, 2024)	23.71	0.871	24.45	0.848	25.88	0.906
DEA (Chen, He and Lu, 2024)	22.11	0.840	21.68	0.768	23.14	0.840
scSE (Roy, Navab and Wachinger, 2018)	22.70	0.854	22.00	0.781	23.20	0.843
GCT (Yang, Zhu, Wu and Yang, 2020)	22.71	0.852	21.79	0.777	23.00	0.841
EMSA (Ours)	**24.32**	**0.880**	**25.02**	**0.861**	**26.19**	**0.915**

Table 5
Ablation study of internal EMSA branches: Global (1×1) and Local (3×3).

Method	LANHAI101		LEPTION		GSL_MARIA	
	PSNR (↑)	SSIM (↑)	PSNR (↑)	SSIM (↑)	PSNR (↑)	SSIM (↑)
Baseline Model	23.99	0.875	24.26	0.843	25.66	0.898
Global (1×1 Branch)	23.01	0.859	22.80	0.806	23.78	0.860
Local (3×3 Branch)	23.00	0.857	22.84	0.803	24.15	0.862
EMSA (Ours)	**24.32**	**0.880**	**25.02**	**0.861**	**26.19**	**0.915**

standard, we proposed MTEA-StitchNet, a novel method based on deep learning that is tailored to these constraints.

Extensive experiments on ShipHull66 confirmed the hypothesis presented in our introduction. In particular, state-of-the-art stitching algorithms, both feature-based and learning-based (e.g., UDIS (Nie et al., 2021c)), suffer significant performance degradation due to the domain gap between natural scenes and monotonous hull surfaces. Conversely, MTEA-StitchNet effectively bridges this gap by incorporating structural edge priors and multi-scale attention mechanisms. Not only does it achieve superior geometric consistency, but more importantly it establishes a reliable baseline for future research on this new benchmark.

Although our method sets a strong precedent for accuracy, limitations remain regarding computational efficiency. MTEA-StitchNet prioritises rigorous alignment precision over inference speed, making it currently heavier than general-purpose lightweight models. Future work will focus on optimising the trade-off between accuracy and latency for onboard UAV deployment. Additionally, while ShipHull66 covers diverse real-world conditions, extreme weather scenarios (e.g., heavy fog) remain unaddressed due to physical data acquisition constraints.

CRediT authorship contribution statement

Hongru Xu: Formal analysis, Methodology, Software, Validation, Writing original draft. **Zhe Hou:** Data curation, Formal analysis, Methodology, Software, Validation. **Chengjia Wang:** Formal analysis, Methodology, Writing - Review & Editing. **Xinghui Dong:** Conceptualization, Funding acquisition, Methodology, Resources, Supervision, Writing review editing.

References

Adel, E., Elmogy, M., Elbakry, H., 2014. Image stitching based on feature extraction techniques: a survey. International Journal of Computer Applications 99, 1–8.

Ballesteros, R., Ortega, J., Hernández, D., Moreno, M., 2014. Applications of georeferenced high-resolution images obtained with unmanned aerial vehicles. part i: Description of image acquisition and processing. Precision Agriculture 15, 579–592.

Bay, H., Ess, A., Tuytelaars, T., Van Gool, L., 2008. Speeded-up robust features (surf). Computer Vision and Image Understanding 110, 346–359.

Bay, H., Tuytelaars, T., Van Gool, L., 2006. Surf: Speeded up robust features, in: European Conference on Computer Vision, Springer. pp. 404–417.

Bonnin-Pascual, F., Ortiz, A., 2019. On the use of robots and vision technologies for the inspection of vessels: A survey on recent advances. Ocean Engineering 190, 106420. doi:10.1016/j.oceaneng.2019.106420.

Chen, Z., He, Z., Lu, Z.M., 2024. Dea-net: Single image dehazing based on detail-enhanced convolution and content-guided attention. IEEE transactions on image processing 33, 1002–1015.

Cheng, S., Yang, F., Chen, Z., Yuan, N., Tao, W., 2023. Deep seam prediction for image stitching based on selection consistency loss. arXiv preprint arXiv:2302.05027 .

Chliveros, G., Tzanetatos, I., Kamzelis, K., 2021. Mavecodd dataset: Marine vessel hull corrosion in dry-dock images.

Deng, J., Dong, W., Socher, R., Li, L.J., Li, K., Fei-Fei, L., 2009. Imagenet: A large-scale hierarchical image database, in: 2009 IEEE conference on computer vision and pattern recognition, Ieee. pp. 248–255.

DeTone, D., Malisiewicz, T., Rabinovich, A., 2016. Deep image homography estimation. arXiv preprint arXiv:1606.03798 .

Fischler, M.A., Bolles, R.C., 1981. Random sample consensus: a paradigm for model fitting with applications to image analysis and automated cartography. Communications of the ACM 24, 381–395.

Fontenla-Carrera, G., Pensado, E.A., Veiga-López, F., González-Jorge, H., 2025. Efficient offshore wind farm inspections using a support vessel and uavs. Ocean Engineering 332, 121416.

Goodfellow, I.J., Pouget-Abadie, J., Mirza, M., Xu, B., Warde-Farley, D., Ozair, S., Courville, A., Bengio, Y., 2014. Generative adversarial nets. Advances in Neural Information Processing Systems 27.

Hassaballah, M., Abdelmgeid, A.A., Alshazly, H.A., 2016. Image features detection, description and matching, in: Image Feature Detectors and Descriptors: Foundations and Applications. Springer, pp. 11–45.

He, K., Zhang, X., Ren, S., Sun, J., 2016. Deep residual learning for image recognition, in: Proceedings of the IEEE Conference on Computer Vision and Pattern Recognition, pp. 770–778.

Jabbar, A., Li, X., Omar, B., 2021. A survey on generative adversarial networks: Variants, applications, and training. ACM Computing Surveys (CSUR) 54, 1–49.

Jia, J., Tang, C.K., 2005. Eliminating structure and intensity misalignment in image stitching, in: Tenth IEEE International Conference on Computer Vision (ICCV'05) Volume 1, pp. 1651–1658 Vol. 2. doi:10.1109/ICCV.2005.87.

Jia, Q., Li, Z., Fan, X., Zhao, H., Teng, S., Ye, X., Latecki, L.J., 2021. Leveraging line-point consistence to preserve structures for wide parallax image stitching, in: Proceedings of the IEEE/CVF conference on computer vision and pattern recognition, pp. 12186–12195.

Jia, Y., Li, Z., Zhang, L., Song, B., Song, R., 2024. Semantic aware stitching for panorama. Sensors 24, 3512.

Juan, L., Oubong, G., 2010. Surf applied in panorama image stitching, in: 2010 2nd International Conference on Image Processing Theory, Tools and Applications, IEEE. pp. 495–499.

Kang, L., Wei, Y., Jiang, J., Xie, Y., 2019. Robust cylindrical panorama stitching for low-texture scenes based on image alignment using deep learning and iterative optimization. Sensors 19, 5310.

Kent, J.T., Mardia, K.V., 1994. Link between kriging and thin plate splines. John Wiley & Sons Ltd .

Kingma, D.P., Ba, J., 2014. Adam: A method for stochastic optimization. arXiv preprint arXiv:1412.6980 .

Krizhevsky, A., Sutskever, I., Hinton, G.E., 2012. Imagenet classification with deep convolutional neural networks. Advances in Neural Information Processing Systems 25.

LeCun, Y., Bengio, Y., Hinton, G., 2015. Deep learning. Nature 521, 436–444.

LeCun, Y., Bottou, L., Bengio, Y., Haffner, P., 2002. Gradient-based learning applied to document recognition. Proceedings of the IEEE 86, 2278–2324.

Levin, A., Zomet, A., Peleg, S., Weiss, Y., 2004. Seamless image stitching in the gradient domain, in: European Conference on Computer Vision, Springer. pp. 377–389.

Liao, T., Li, N., 2019. Single-perspective warps in natural image stitching. IEEE transactions on image processing 29, 724–735.

Lin, B., Dong, X., 2023. Ship hull inspection: A survey. Ocean Engineering 289, 116281.

Lin, B., Dong, X., 2024. A multi-task segmentation and classification network for remote ship hull inspection. Ocean Engineering 301, 117608.

Lowe, D.G., 1999. Object recognition from local scale-invariant features, in: Proceedings of the Seventh IEEE International Conference on Computer Vision, IEEE. pp. 1150–1157.

Lowe, D.G., 2004. Distinctive image features from scale-invariant keypoints. International Journal of Computer Vision 60, 91–110.

Makrigiorgis, R., Kolios, P., Kyrkou, C., 2022. Aerial vessels detection dataset (1.0) [data set].

Milletari, F., Navab, N., Ahmadi, S.A., 2016. V-net: Fully convolutional neural networks for volumetric medical image segmentation, in: 2016 Fourth International Conference on 3D Vision (3DV), IEEE. pp. 565–571.

Min, Z., Jiguo, Z., Xusheng, X., 2012. Panorama stitching based on sift algorithm and levenberg-marquardt optimization. Physics Procedia 33, 811–818.

Nair, A., Sivaprasad, K., Nandakumar, C., 2017. Crack assessment criteria for ship hull structure based on ship operational life. Cogent Engineering 4, 1345044.

Nguyen, T., Chen, S.W., Shivakumar, S.S., Taylor, C.J., Kumar, V., 2018. Unsupervised deep homography: A fast and robust homography estimation model. IEEE Robotics and Automation Letters 3, 2346–2353.

Ni, J., Li, Y., Ke, C., Zhang, Z., Cao, W., Yang, S.X., 2024a. A fast unsupervised image stitching model based on homography estimation. IEEE Sensors Journal 24, 29452–29467. doi:10.1109/JSEN.2024.3436051.

Ni, Z., Chen, X., Zhai, Y., Tang, Y., Wang, Y., 2024b. Context-guided spatial feature reconstruction for efficient semantic segmentation, in: European Conference on Computer Vision, Springer. pp. 239–255.

Nie, L., Lin, C., Liao, K., Liu, S., Zhao, Y., 2021a. Depth-aware multi-grid deep homography estimation with contextual correlation. IEEE Transactions on Circuits and Systems for Video Technology 32, 4460–4472.

Nie, L., Lin, C., Liao, K., Liu, S., Zhao, Y., 2021b. Unsupervised deep image stitching: Reconstructing stitched features to images. IEEE Transactions on Image Processing 30, 6184–6197. doi:10.1109/TIP.2021.3092828.

Nie, L., Lin, C., Liao, K., Liu, S., Zhao, Y., 2021c. Unsupervised deep image stitching: Reconstructing stitched features to images. IEEE Transactions on Image Processing 30, 6184–6197.

Nie, L., Lin, C., Liao, K., Liu, S., Zhao, Y., 2023. Parallax-tolerant unsupervised deep image stitching, in: Proceedings of the IEEE/CVF International Conference on Computer Vision, pp. 7399–7408.

Noble, F.K., 2016. Comparison of opencv's feature detectors and feature matchers, in: 2016 23rd International Conference on Mechatronics and Machine Vision in Practice (M2VIP), IEEE. pp. 1–6.

Ouyang, D., He, S., Zhang, G., Luo, M., Guo, H., Zhan, J., Huang, Z., 2023. Efficient multi-scale attention module with cross-spatial learning, in: ICASSP 2023-2023 IEEE International Conference on Acoustics, Speech and Signal Processing (ICASSP), IEEE. pp. 1–5.

Qu, Z., Lin, S.P., Ju, F.R., Liu, L., 2015. The improved algorithm of fast panorama stitching for image sequence and reducing the distortion errors. Mathematical Problems in Engineering 2015, 428076.

Rosten, E., Drummond, T., 2006. Machine learning for high-speed corner detection, in: European Conference on Computer Vision, Springer. pp. 430–443.

Roy, A.G., Navab, N., Wachinger, C., 2018. Concurrent spatial and channel squeeze & excitationin fully convolutional networks, in: International conference on medical image computing and computer-assisted intervention, Springer. pp. 421–429.

Sakharkar, V.S., Gupta, S., 2013. Image stitching techniques-an overview. Int. J. Comput. Sci. Appl 6, 324–330.

Shrestha, A., Mahmood, A., 2019. Review of deep learning algorithms and architectures. IEEE Access 7, 53040–53065.

Varga, L.A., Kiefer, B., Messmer, M., Zell, A., 2022. Seadronessee: A maritime benchmark for detecting humans in open water, in: Proceedings of the IEEE/CVF Winter Conference on Applications of Computer Vision (WACV), pp. 2260–2270.

Viswanathan, D.G., 2009. Features from accelerated segment test (fast), in: Proceedings of the 10th Workshop on Image Analysis for Multimedia Interactive Services, London, UK, pp. 6–8.

Wang, C., Yi, K., Zhou, W., Wang, S., Yi, H., Gao, Z., 2024. Adaptive unsupervised learning network for image stitching, in: International Conference on Life System Modeling and Simulation, Springer. pp. 270–281.

Wang, F.B., Tu, P., Wu, C., Chen, L., Feng, D., 2018. Multi-image mosaic with sift and vision measurement for microscale structures processed by femtosecond laser. Optics and Lasers in Engineering 100, 124–130.

Wang, H., Zhang, J., Dai, C., Cheng, H., Wang, J., 2025. An effective unsupervised image stitching method based on improved udisnet. Engineering Research Express 7, 015222.

Wang, L., Yu, W., Li, B., 2020. Multi-scenes image stitching based on autonomous driving, in: 2020 IEEE 4th Information Technology, Networking, Electronic and Automation Control Conference (ITNEC), IEEE. pp. 694–698.

Wang, Z., Bovik, A.C., Sheikh, H.R., Simoncelli, E.P., 2004. Image quality assessment: from error visibility to structural similarity. IEEE transactions on image processing 13, 600–612.

Wang, Z., Yang, Z., 2020. Review on image-stitching techniques. Multimedia Systems 26, 413–430.

Waszak, M., Cardaillac, A., Elvesæter, B., Rødølen, F., Ludvigsen, M., 2023. Semantic segmentation in underwater ship inspections: Benchmark and data set. IEEE Journal of Oceanic Engineering 48, 462–473.

Wei, L., Zhong, Z., Lang, C., Yi, Z., 2019. A survey on image and video stitching. Virtual Reality & Intelligent Hardware 1, 55–83.

Wu, H., Zheng, S., Zhang, J., Huang, K., 2019. Gp-gan: Towards realistic high-resolution image blending, in: Proceedings of the 27th ACM International Conference on Multimedia, pp. 2487–2495.

Wu, Y.H., Liu, Y., Zhang, L., Cheng, M.M., Ren, B., 2022. Edn: Salient object detection via extremely-downsampled network. IEEE Transactions on Image Processing 31, 3125–3136.

Xie, S., Tu, Z., 2015. Holistically-nested edge detection, in: Proceedings of the IEEE International Conference on Computer Vision, pp. 1395–1403.

Yan, N., Mei, Y., Xu, L., Yu, H., Sun, B., Wang, Z., Chen, Y., 2023. Deep learning on image stitching with multi-viewpoint images: A survey. Neural Processing Letters 55, 3863–3898.

Yang, Z., Yin, Y., Xu, H., Jing, Q., Jiang, Z., Liao, T., Guedes Soares, C., 2025. Advancements of image and video stitching techniques: A review. IEEE Sensors Journal 25, 23526–23551. doi:10.1109/JSEN.2025.3563082.

Yang, Z., Zhu, L., Wu, Y., Yang, Y., 2020. Gated channel transformation for visual recognition, in: Proceedings of the IEEE/CVF conference on computer vision and pattern recognition, pp. 11794–11803.

Yu, W., Zhou, P., Yan, S., Wang, X., 2024. Inceptionnext: When inception meets convnext, in: Proceedings of the IEEE/cvf conference on computer vision and pattern recognition, pp. 5672–5683.

Zhang, Y., Jin, X., Wang, Z., 2017. A new modified panoramic uav image stitching model based on the ga-sift and adaptive threshold method. Memetic Computing 9, 231–244.

Zhi, Q., Cooperstock, J.R., 2012. Toward dynamic image mosaic generation with robustness to parallax. IEEE Transactions on Image Processing 21, 366–378. doi:10.1109/TIP.2011.2162743.

Zhu, J., Ren, M., 2014. Image mosaic method based on sift features of line segment. Computational and Mathematical Methods in Medicine 2014, 926312.

Zomet, A., Levin, A., Peleg, S., Weiss, Y., 2006. Seamless image stitching by minimizing false edges. IEEE Transactions on Image Processing 15, 969–977. doi:10.1109/TIP.2005.863958.